EN

QUICK INSTALLATION GUIDE

SMILE-G3-T4-INV /SMILE-G3-T5-INV / SMILE-G3-T6-INV
SMILE-G3-T8-INV / SMILE-G3-T10-INV

V02

412-10004-01

01 Product Overview

(1) Backup Connector
(2) Grid Connector
(3) Grounding Point
(4) PV Switch
(5) PV + Connectors / PV - Connectors
(6) BAT + Connector / BAT - Connector
(7) Battery Circuit Breaker
(8) Communication Ports
(9) Wi-Fi Port
(10) LED Display

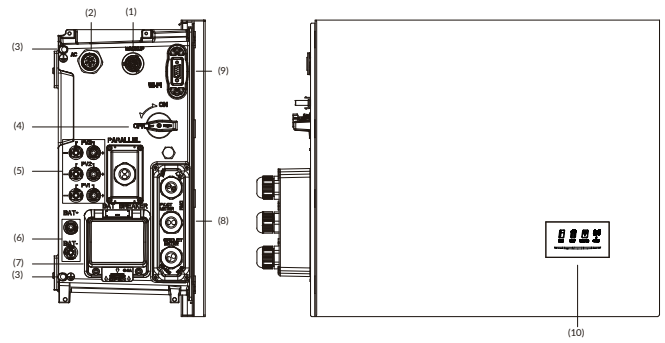

02 Accessories and Installation Tools

2.1 Scope of Delivery

Inverter (×1)	Top Cover (×1)	Right Cover (×1)	Cable Cover (×1)	Left Support Foot (×1)	Right Support Foot (×1)
PV+ & PV- Connectors (×3)	Grid Connector (×1)	Backup Connector (×1)	Wi-Fi Module (×1)	6 Pin AUX Terminal Block (×2)	Series Battery Power + Cable (×1)
Series Battery Power - Cable (×1)	Grounding Cable (×1)	Screws and Terminals Set (×1)	Quick Installation Guide (×1)	System Wiring Diagram (×1)	PV&BAT Connector Disassembling Tool (×1)

2.2 (Optional) Accessories for Wall Mounting

Wall Bracket (×1)	Support Stud for Right Cover (×1)	Hooks for Wall Brackets (×4)	Wall Anchor ST6*55 (×5)	Support Plate for Cable Cover (×1)	Support Plate for Cable Cover (×1)
	Screws M5*12 (×1)	Screw M4*10 (×2)	Flange nut M5 (×7)	Connectors for Wall Brackets (×2)	

2.3 Installation Tools

T20 Torx Screwdriver	Spirit Level	Blade Width: 1.2/2.5mm Flat-Head Screwdriver	SW8 Socket Wrench	Wire Stripper	Network Plug Clamp
Cord End Terminal Crimper	Crimping Pliers (Model: PV-CZM-22100)	Tape Measure	Hammer Drill, Bit Ø10	Multimeter	Current Clamp

03 Installing the Inverter

3.1 Installing the Inverter Standing on the Battery

Before installing the inverter, please ensure that the battery has been installed properly.

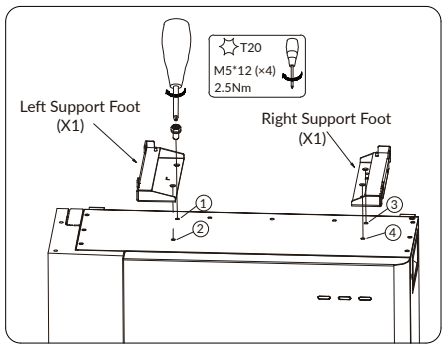

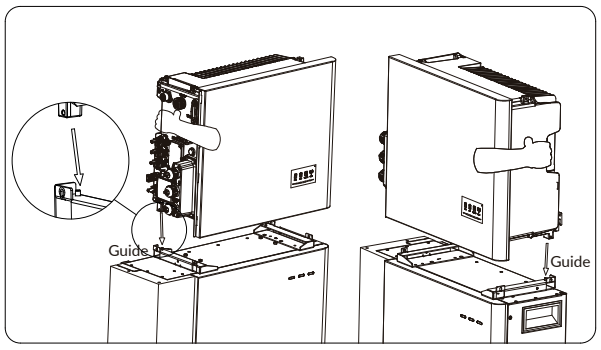

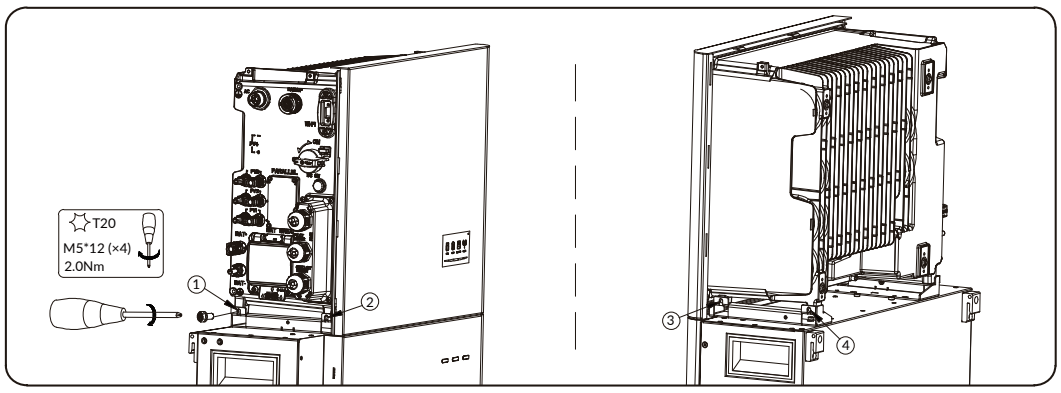

3.2 (Optional) Installing the Inverter Mounted with Wall Bracket

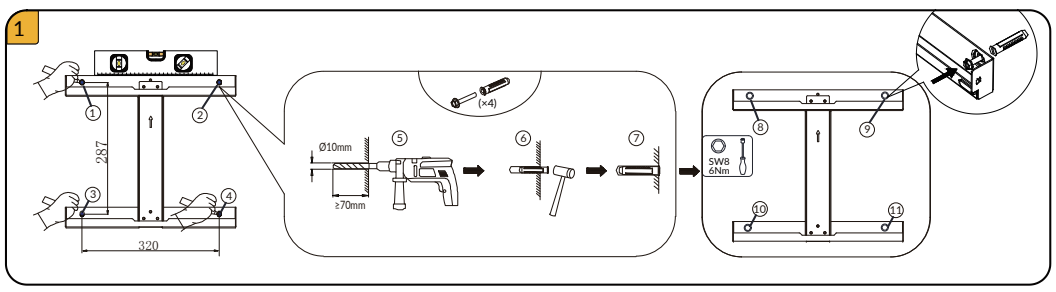

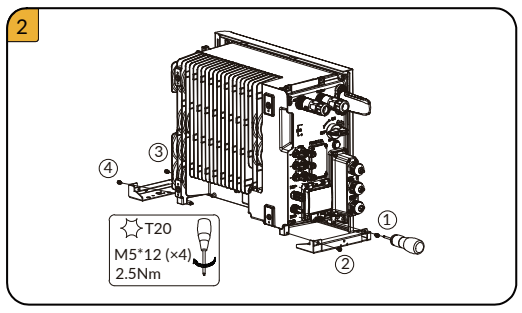

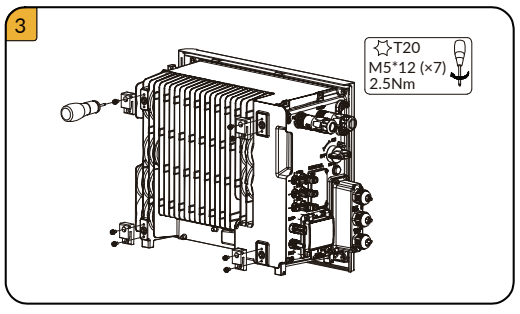

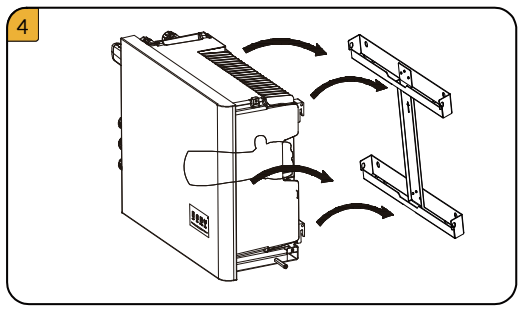

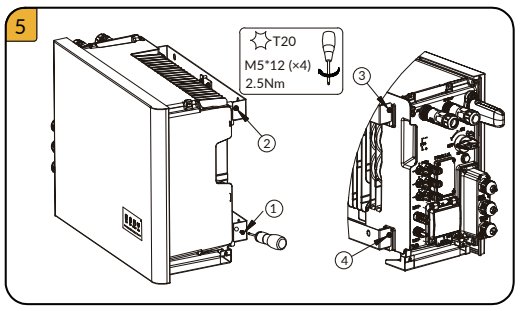

04 Electrical Connection

DANGER

You must protect each inverter with an individual grid/backup circuit breaker in order to ensure that the inverter can be disconnected safely.

WARNING

Before doing electrical connection, please ensure the PV switch & all AC and BAT circuit breakers are switched OFF and cannot be reactivated.

NOTE Please refer to the System Wiring Diagram for detailed wiring.

4.1 Grounding Connection

Additional grounding

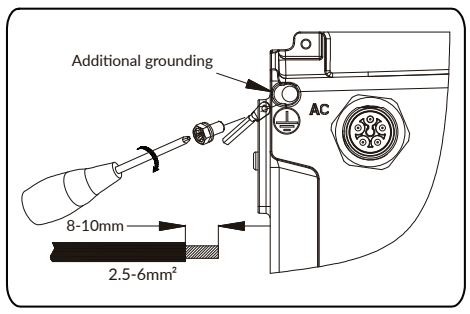

Inverter grounding point for battery

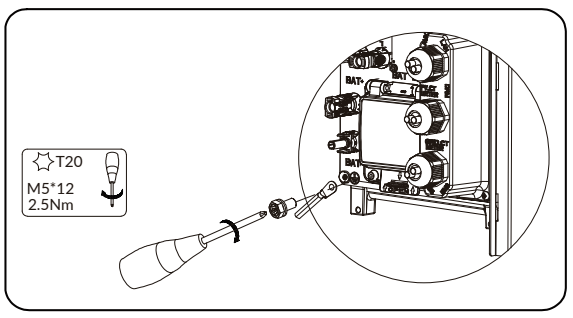

Grounding connection for series battery

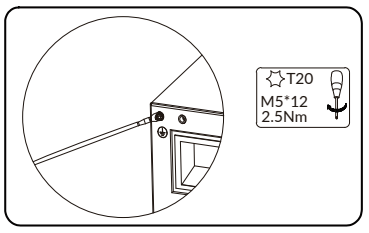

Grounding connection for parallel battery

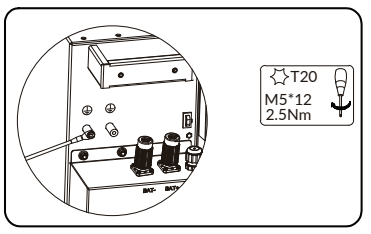

4.2 Grid/Backup Connection

AC connection recommendation for T4-INV

Description	Max. Current	AC Circuit Breaker Type	Recommended Cable Cross-Section
Grid Side	11.6A	16A	2.5~6mm²
Backup Side	8.7A	16A	2.5~6mm²

AC connection recommendation for T5-INV

Description	Max. Current	AC Circuit Breaker Type	Recommended Cable Cross-Section
Grid Side	14.5A	25A	4~6mm²
Backup Side	10.9A	16A	2.5~6mm²

AC connection recommendation for T6-INV

Description	Max. Current	AC Circuit Breaker Type	Recommended Cable Cross-Section
Grid Side	17.4A	25A	4~6mm²
Backup Side	13A	20A	4~6mm²

AC connection recommendation for T8-INV

Description	Max. Current	AC Circuit Breaker Type	Recommended Cable Cross-Section
Grid Side	17.4A	25A	4~6mm²
Backup Side	17.4A	25A	4~6mm²

AC connection recommendation for T10-INV

Description	Max. Current	AC Circuit Breaker Type	Recommended Cable Cross-Section
Grid Side	21.7A	32A	4~6mm²
Backup Side	21.7A	32A	4~6mm²

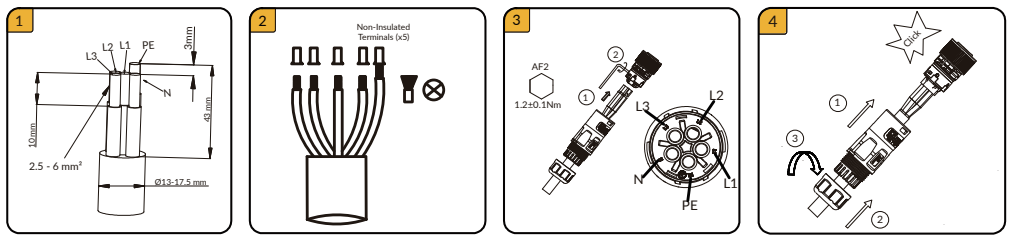

The steps for backup connection are similar to grid connection.

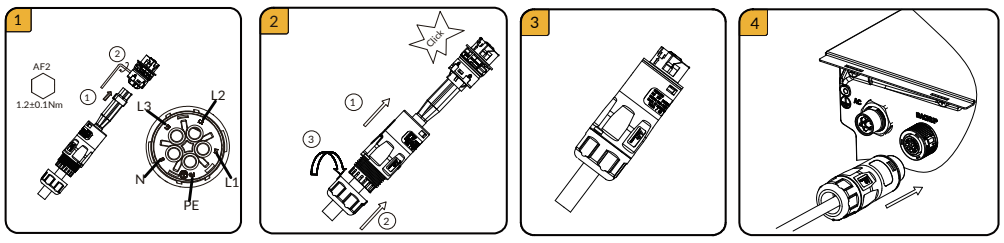

Disassembling connector

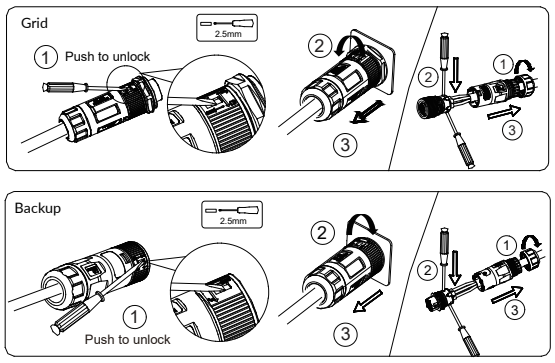

4.3 PV Connection

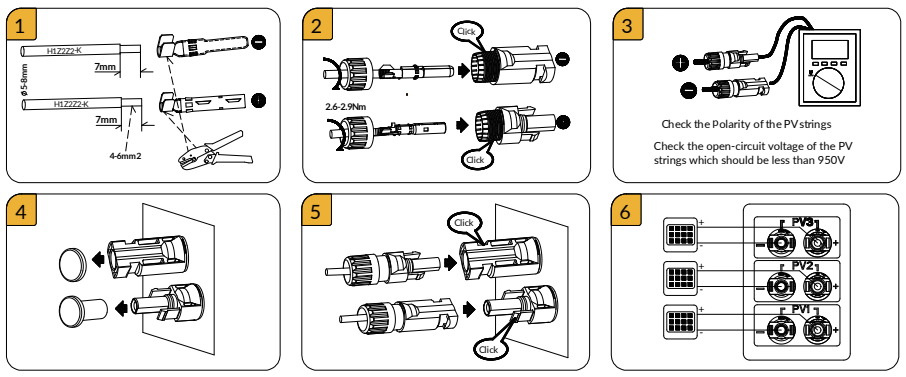

4.4 Connecting the Battery to the Inverter

DANGER

Danger to life due to burns caused by electric arcs through short-circuit currents.

Short-circuit currents in the battery can cause heat build-up and electric arcs. Heat build-up and electric arcs may result in lethal injuries due to burns.

- Disconnect the battery from all voltages sources prior to performing any work on the battery.
- Disconnect the inverter from all voltages sources prior to performing any work on the inverter.
- DO NOT short-circuit the battery terminals. First, complete the main negtive terminal connection between battery and inverter, and then complete the main positive terminal connection between battery and inverter.
- Observe the battery safety information provided in the Installation & Operation & Maintenance Manual.

BAT connection for inverter and series battery

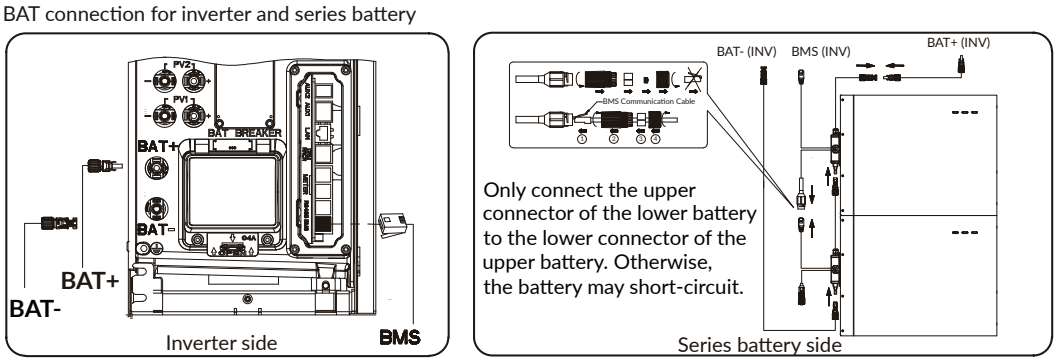

BAT power connection for inverter and parallel battery

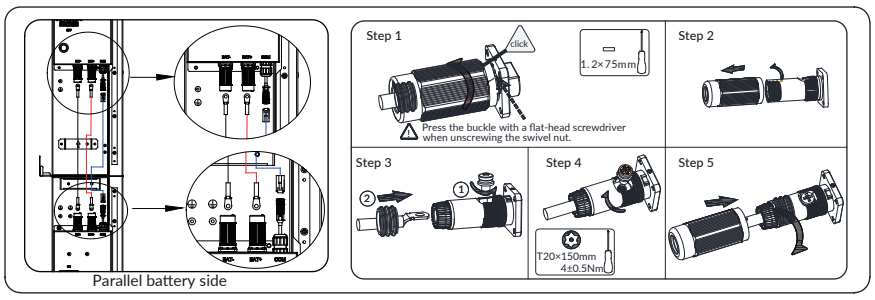

Disassembling the BAT connector for series batteries

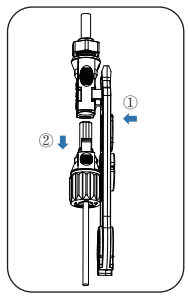

05 Communication Connection

5.1 Wi-Fi Connection

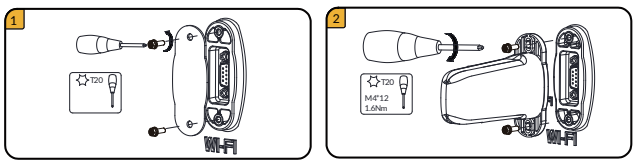

5.2 Other Communication Connection

AUX / LAN / DRM&RRCR / METER / RS485 / BMS Connection

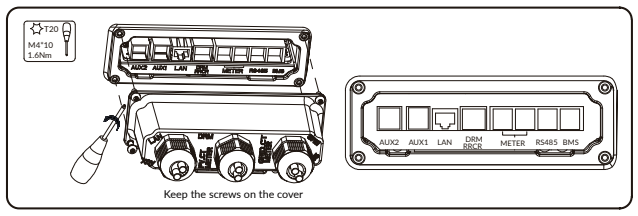

BMS	1	2	3	4	5	6	7	8
	/	RS485_A4	/	CAN1_H	CAN1_L	/	RS485_B4	/
RS 485	1	2	3	4	5	6	7	8
	12V	DEBUG_RXD_COM	GND	RS 485- B5	RS 485- A5	/	DEBUG_TXD_COM	/
METER	1	2	3	4	5	6	7	8
	/	/	RS485_A7	/	/	RS485_B7	/	/
DRM	1	2	3	4	5	6	/	/
	DRED 1 /5	DRED 2/6	DRED 3/7	DRED 4/8	REF GEN/0	COMLOAD/0	/	/
RRCR	1	2	3	4	5	6		
	K1	K2	K3	K4	3.3V	/		
AUX1	1	2	3	4	5	6		
	DO1_NO	DO1_COM	DO1_NC	DI_negative	DI_positive	GND		
AUX2	1	2	3	4	5	6		
	DO2_NO	DO2_COM	DO2_NC	DI_negative	DI_positive	GND		

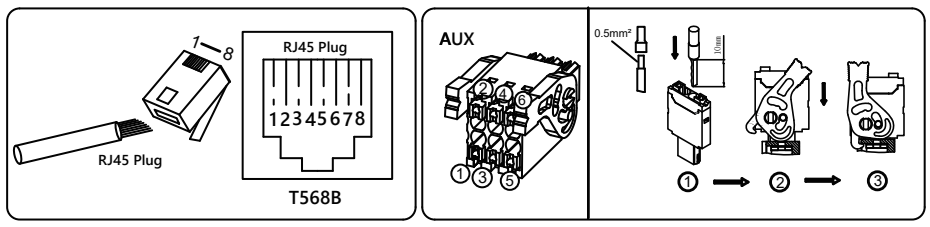

Wiring the Communication Cables to the Inverter

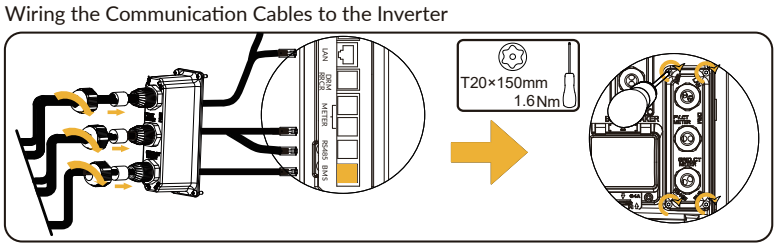

06 Commissioning

WARNING

Never power on the energy storage system without the correct and reliable installation and electrical connection.

Follow the steps in the COMMISSIONING GUIDE AND REPORT to download the AlphaESS APP, register your account, power on the system, configure Wi-Fi port, set system parameter and operate the system.
After completing the commissioning, please submit the commissioning report.

07 Power ON / OFF the Energy Storage System Procedure

Procedure for Powering ON the System

1) Switch on the battery circuit breaker at the low left of the inverter.
2) Switch on the battery circuit breakers of all batteries.
3) Shortly press the battery power buttons. For more than one parallel battery installed, please shortly press all power buttons within 30 seconds. (For series batteries, please skip this step.)
4) Switch on the AC circuit breaker between the grid port of the inverter and the grid.
5) Switch on the AC circuit breaker between the backup port of the inverter and the loads.
6) Switch on the PV switch between the PV strings and the inverter if there is any.
7) Switch on the PV switch on the left side of the inverter, directly below the Wi-Fi port.
8) Switch on the AC circuit breaker (if there is any) between the PV-inverter and the grid.

Procedure for Powering OFF the System

1) Switch off the AC circuit breaker between the backup port of the inverter and the loads.
2) Switch off the PV switch on the left of the inverter, directly below the Wi-Fi port.
3) Switch off the PV switch (if there is any) between the PV strings and the inverter.
4) Press and hold the power button of the battery for 6 seconds, which is near the battery circuit breaker. (For series batteries, please skip this step)
5) Switch off the battery circuit breakers of all the batteries.
6) Switch off the battery circuit breakers at the lower left the inverter.
7) Switch off the AC circuit breaker (if there is any) between the PV-inverter and the grid.
8) Switch off the AC circuit breaker bettwen the grid port of the inverter and the grid.

08 Mounting the Covers of the Inverter

WARNING

Make sure all the wiring has been done and the energy storage system works normally, then mount the covers of the inverter.

8.1 Mounting the Top Cover

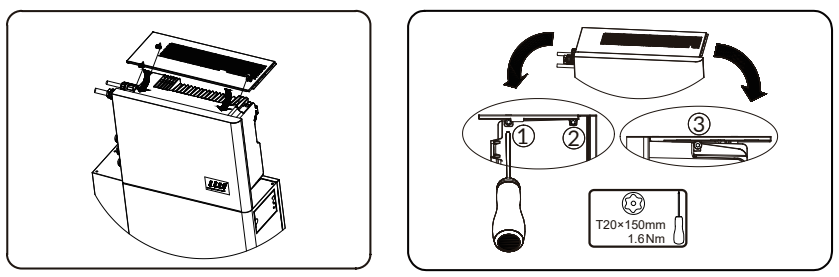

8.2 Mounting other Covers when Inverter Standing on the Battery

Mounting the Right Cover

Mounting the Cable Cover

Disassembling the Cable Cover

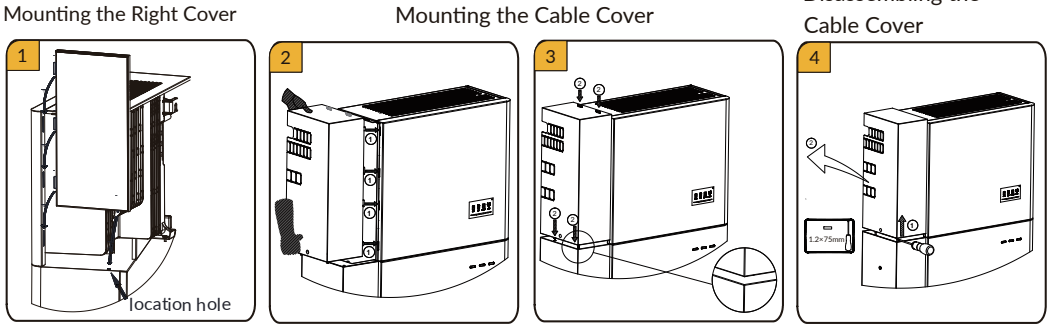

8.3 (Optional) Mounting other Covers when Inverter Mounted with Wall Bracket

Mounting the Support Studs of the Right Cover and Cable Cover

Mounting the Cable Cover and Right Cover

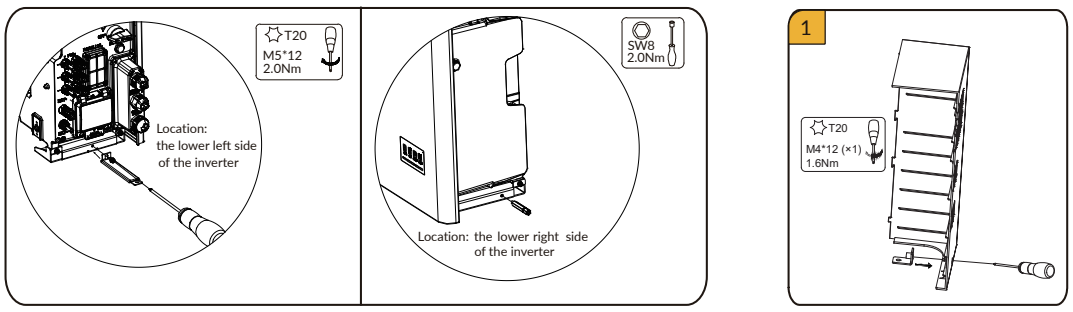

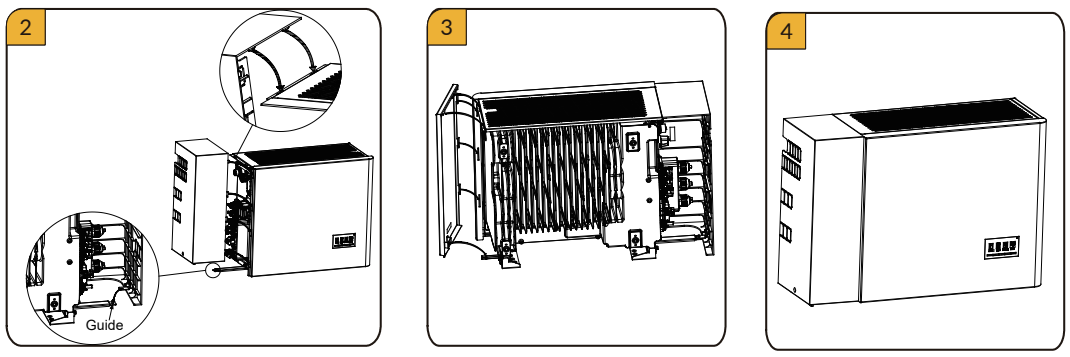

For more information, please download the user manual and other technical documents.

System User Manual

System Installation Manual

App Manual (Installer)